REVISIONS			
REV	DESCRIPTION	DATE	APPROVED
01	ALPHA RELEASE	31/08/15	RASB
02	BETA RELEASE	28/09/15	RASB
03	PRODUCTION RELEASE	15/12/15	RASB

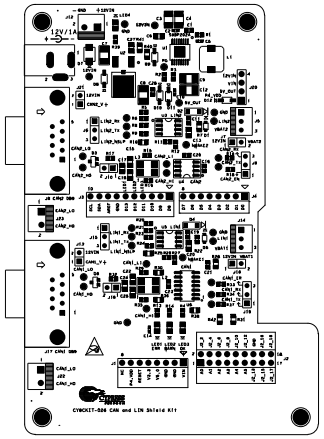

600-60283-01 REV03 PRIMARY SILKSCREEN

PRIMARY SIDE

UNLESS OTHERWISE SPECIFIED	SIGNATURES	DATE
DIMENSIONS ARE IN INCHES	DRAWN RASB	15/12/15
TOLERANCES ON: ANGLES +/- 2°	CHECKED MVRE	15/12/15
2 PL DECIMALS +/- .010	ENGRG	
3 PL DECIMALS +/- .005	ISSUED	
THIRD ANGLE PROJECTIONS		

CYPRESS PROPRIETARY
THIS DOCUMENT CONTAINS CONFIDENTAL, PROPRIETARY INFORMATION THAT IS CYPRESS SEMICONDUCTOR PROPERTY. DO NOT DISCLOSE TO OR DUPLICATE FOR OTHERS EXCEPT AS AUTHORIZED BY CYPRESS.

CYPRESS SEMICONDUCTOR
198 CHAMPION COURT
SAN JOSE, CA 95134
(408) 943-2600

ASSEMBLY DRAWING
CY8CKIT-026
CAN and LIN Shield Kit

SIZE	FSCM NO	DWG NO	REV
C		620-60280-01	03

SCALE: 1/1

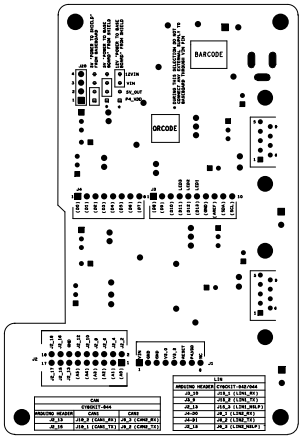

600-60283-01 REV03 SECONDARY SILKSCREEN

SECONDARY SIDE

CYPRESS SEMICONDUCTOR
198 CHAMPION COURT
SAN JOSE, CA 95134
(408) 943-2600

ASSEMBLY DRAWING
CY8CKIT-026
CAN and LIN Shield Kit

SIZE	FSCM NO	DWG NO	REV
C		620-60280-01	03

SCALE: 1/1

SHEET: 2 OF 2